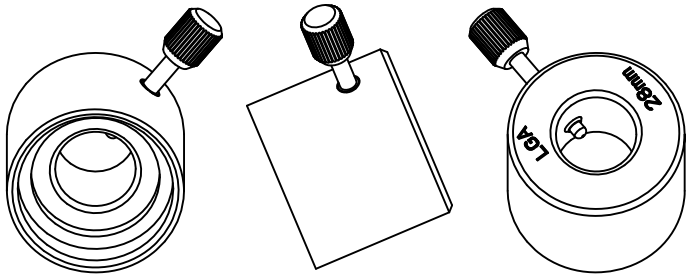

ISO VIEW / SCALE 1:1

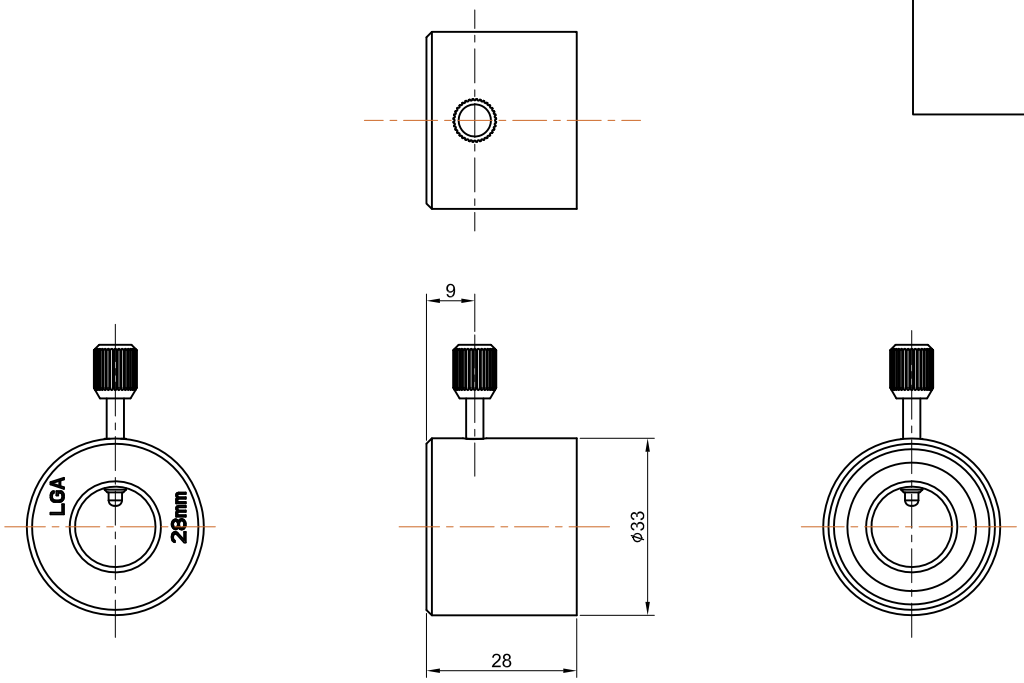

NOTE.

R=0.3
C=0.5

UNIT mm				Dwg.NO. FILE NAME	
TOLERANCE ±0.05				MODEL NAME	
Date 2017.07.20				TITLE MLB-LGA	
	DESIGNED_BY KH.KIM	CHECK_BY	APPROVED_BY	SCALE 1 : 1	SHEET 1 / 2 A3